Study Material: Computer System
Subject: Informatics Practices
Class XI
Course Instructor: **Prabhat Das (PGT-IP)**

Contents:

1. Introduction
2. Computer System
3. Computer Organization
4. Evolution of Computers
5. Computer Memory
6. Computer System and Data
7. Software

1.INTRODUCTION:

A computer is an electronic device that can be programmed to accept data (input), process it and generate result (output). A computer along with additional hardware and software together is called a computer system.

Computer are the machines that have revolutionised the world around us. The way we used to live a decade ago is different from now.

Computers deliver so much, diligently and efficiently, all thanks to the wonderful combination of hardware and software.

2.COMPUTER SYSTEM:

A computer system comprises of five basic components:

a. Input Unit. It is responsible for taking input for the computer. The input device attached to the computer system make the input unit.
b. Output Unit. It is responsible for taking input for the computer. The output devices attached to the computer system make the output unit.
c. Central Processing Unit (CPU). It is responsible for processing the data and instructions.

The CPU comprises of the following parts :

i. Arithmetic and Logic Unit (ALU): It is responsible for carrying out the arithmetic instructions (add, subtract, multiply, divide) and making logic decisions (greater than, less than, equal to).
ii. Control Unit: It is responsible for controlling and supervising the processing

iii. Registers: Small unit of data holding places. The CPU uses registers to temporary hold some important processing information during the time the processing is taking place.

*Different types of Register (Not important from exam perspective):

Register	Symbol	Number of bits	Function
Data register	DR	16	Holds memory operand
Address register	AR	12	Holds address for the memory
Accumulator	AC	16	Processor register
Instruction register	IR	16	Holds instruction code
Program counter	PC	12	Holds address of the instruction
Temporary register	TR	16	Holds temporary data
Input register	INPR	8	Carries input character
Output register	OUTR	8	Carries output character

d. Primary Memory. t is the internal volatile memory where data and instructions are stored during processing.
e. Secondary Storage Unit. It refers to the external storage devices which provide permanent memory to the computer system.

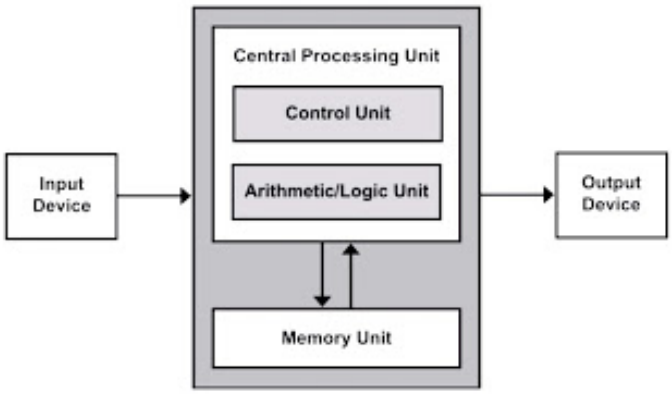

Block diagram of computer system

3.COMPUTER ORGANIZATION:

Refers to the logical structure of a computer describing how the components are connected to each other; how the components coordinate together for the better performance.

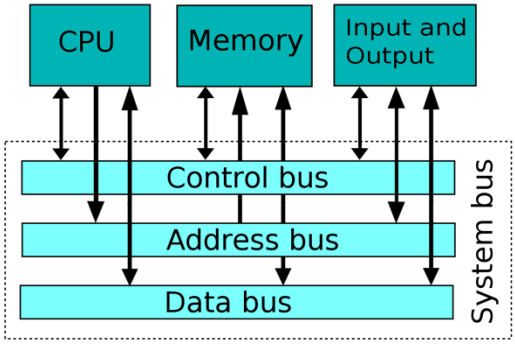

The System Bus:

The system bus (or the bus) is an electronic pathway connects the major components of a commuter system. Through system bus, data and instructions are passed among the computer system components.

- The data carrying part of system bus is called **data bus.**
- The control instruction carrying part of system bus is called **control bus.**
- The memory address carrying part of system bus is called **Address bus.**
- A separate type of bus called **I/O bus** connects the Input, Output and other external devices to the system.

4.EVOLUTION OF COMPUTERS:

The development of computer systems is normally discussed as the development over different generations.

With the succession of different generations, came the advancement in computer technology.

Let us now discuss the development in Computer Technology over the different generations.

First Generation (1940 to 1956)

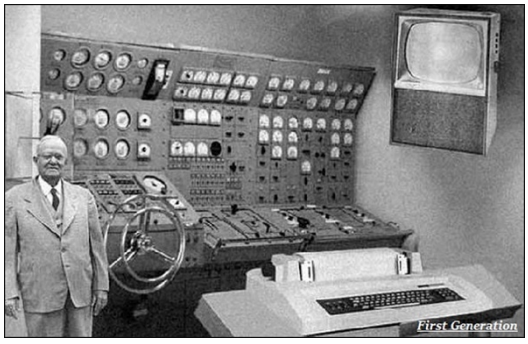

- Vacuum tube technology
- Unreliable
- Supported machine language only
- Very costly
- Generated a lot of heat
- Slow input and output devices

- Huge size
- Need of AC
- Non-portable
- Consumed a lot of electricity

Some computers of this generation were −

- ENIAC
- EDVAC
- UNIVAC
- IBM-701
- IBM-650

Second Generation

- Use of transistors
- Reliable in comparison to first generation computers
- Smaller size as compared to first generation computers
- Generated less heat as compared to first generation computers
- Consumed less electricity as compared to first generation computers
- Faster than first generation computers
- Still very costly
- AC required
- Supported machine and assembly languages

Some computers of this generation were −

- IBM 1620
- IBM 7094
- CDC 1604
- CDC 3600
- UNIVAC 1108

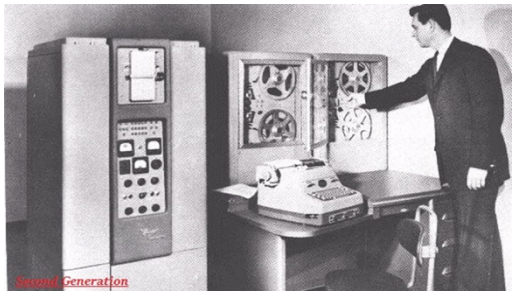

Third Generation (1963 to 1971)

- IC used
- More reliable in comparison to previous two generations
- Smaller size
- Generated less heat
- Faster

- Lesser maintenance
- Costly
- AC required
- Consumed lesser electricity
- Supported high-level language


Third Generation

Some computers of this generation were −

- IBM-360 series
- Honeywell-6000 series
- PDP (Personal Data Processor)
- IBM-370/168
- TDC-316

Fourth Generation(1972 to 2010)

- VLSI technology used
- Very cheap
- Portable and reliable
- Use of PCs
- Very small size
- Pipeline processing
- No AC required
- Concept of internet was introduced
- Great developments in the fields of networks
- Computers became easily available

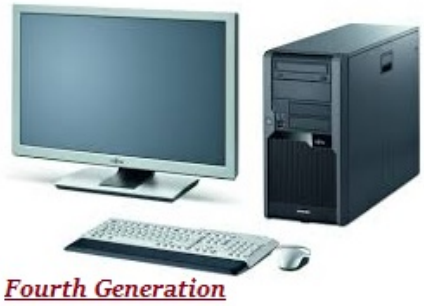
Fourth Generation

Some computers of this generation were −

- DEC 10
- STAR 1000
- PDP 11
- CRAY-1(Super Computer)
- CRAY-X-MP(Super Computer)

Fifth Generation (2010 to till date and beyond)

The main features of fifth generation are −

- ULSI technology
- Development of true artificial intelligence
- Development of Natural language processing
- Advancement in Parallel Processing
- Advancement in Superconductor technology
- More user-friendly interfaces with multimedia features
- Availability of very powerful and compact computers at cheaper rates

AI includes −

- Robotics
- Neural Networks
- Game Playing
- Development of expert systems to make decisions in real-life situations
- Natural language understanding and generation

Some computer types of this generation are −

- Desktop
- Laptop
- NoteBook
- UltraBook
- ChromeBook



Microprocessor Evolution:

An integrated circuit (IC) is a small electronic circuit made out of a semiconductor material, it is a circuit on a single chip. IC got created as engineers were able to stuff a number of transistors and logic gates on single chip. Chips started with SSI (small scale integration) where about 10 transistors were stuffed on a single chip to create circuits and with time, they have evolved to be so dense that now modern day chips are able to stuff about a million transistors on a single chip (Ultra Large Scale Integration-ULSI), as you can see yourself in the following table. And this is one major contributing reason toward the reducing size of computers with increased computing power.

Name	Signification	Year	Transistors number[46]	Logic gates number[47]
SSI	*small-scale integration*	1964	1 to 10	1 to 12
MSI	*medium-scale integration*	1968	10 to 500	13 to 99
LSI	*large-scale integration*	1971	500 to 20,000	100 to 9,999
VLSI	*very large-scale integration*	1980	20,000 to 1,000,000	10,000 to 99,999
ULSI	*ultra-large-scale integration*	1984	1,000,000 and more	100,000 and more

5.COMPUTER MEMORY:

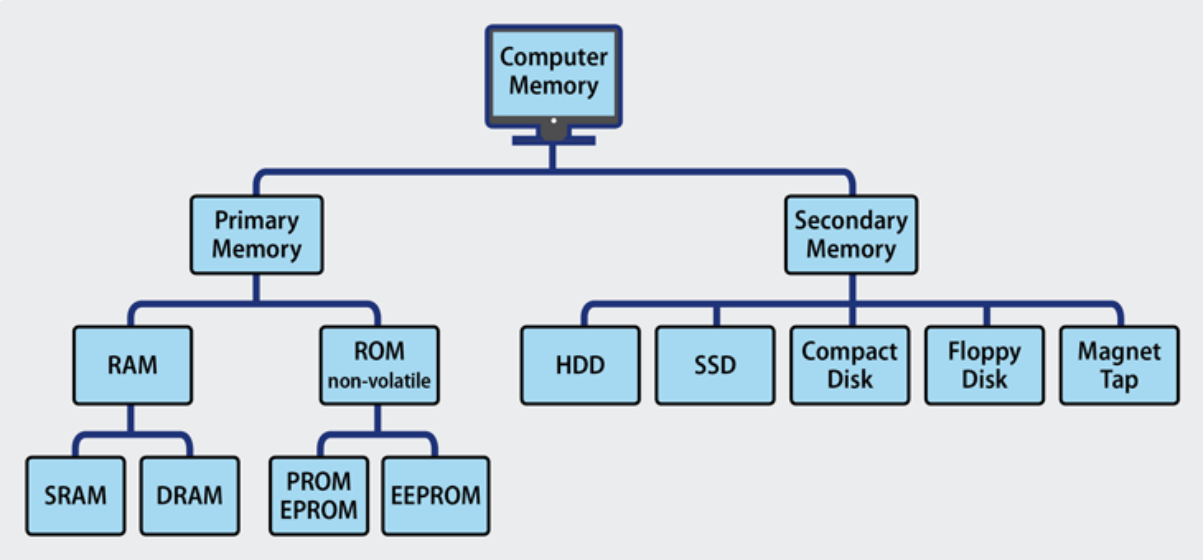

Primary Memory: Without which a computer cannot run.

RAM: Is volatile i.e. as long as the power is supplied to the computer, it retains the data in it.

ROM: Is non-volatile, means its contents are not lost even when the power is turned off. It is used as a small but faster permanent storage for the contents which are rarely changed. For example, the start-up program (boot loader) that loads the operating system into RAM is stored in a ROM.

SRAM VS DRAM:

Static RAM	Dynamic RAM
➢ SRAM uses transistor to store a single bit of data	➢ DRAM uses a separate capacitor to store each bit of data
➢ SRAM does not need periodic refreshment to maintain data	➢ DRAM needs periodic refreshment to maintain the charge in the capacitors for data
➢ SRAM's structure is complex than DRAM	➢ DRAM's structure is simplex than SRAM
➢ SRAM are expensive as compared to DRAM	➢ DRAM's are less expensive as compared to SRAM
➢ SRAM are faster than DRAM	➢ DRAM's are slower than SRAM
➢ SRAM are used in Cache memory	➢ DRAM are used in Main memory

PROM VS EPROM VS EEPROM:

PROM VS EPROM VS EEPROM

PROM	EPROM	EFPROM
A Read Only Memory (ROM) that can be modified only once by a users	A programmable ROM that can be erased and reused	A user-modifiable ROM that can be erased and reprogrammed repeatedly through a normal electrical voltage
Stands for Programmable Read Only Memory	Stands for Erasable Programmable Read Only Memory	Stands for Electrically Erasable Programmable Read-Only Memory
Developed by Wen Tsing Chow in 1956	Developed by Dov Frohman in 1971	Developed by George Perlegos in 1978
Reprogrammable only once	Can be reprogramed using ultraviolet light	Can be reprogramed using electrical charge

Visit www.pediaa.com

Secondary Memory: Without which a computer can even run. Primary memory has limited storage capacity and is either volatile (RAM) or read-only (ROM). Thus, a computer system needs auxiliary or secondary memory to permanently store the data or instructions for future use. The secondary memory is non-volatile and has larger storage capacity than primary memory. It is slower and cheaper than the main memory. But, it cannot be accessed directly by the CPU. Contents of secondary storage need to be first brought into the main memory for the CPU to access. Examples of secondary memory devices include Hard Disk Drive (HDD), CD/ DVD, Memory Card, etc., as shown in Figure.

However, these days, there are secondary storage devices like Solid-State Drive (SSD) which support very fast data transfer speed as compared to earlier HDDs. Also, data transfer between computers have become easier and simpler due to the availability of small sized and portable flash/pen drives.



Memory Conversion Table:

Unit	Description	Unit	Description
KB (Kilobyte)	1 KB = 1024 Bytes	PB (Petabyte)	1 PB = 1024 TB
MB (Megabyte)	1 MB = 1024 KB	EB (Exabyte)	1 EB = 1024 PB
GB (Gigabyte)	1 GB = 1024 MB	ZB (Zettabyte)	1 ZB = 1024 EB
TB (Terabyte)	1 TB = 1024 GB	YB (Yottabyte)	1 YB = 1024 ZB

6.COMPUTER SYSTEM AND DATA:

Data is a collection of facts, such as numbers, words, measurements, observations or just descriptions of things.

Data can be classified into the following types:

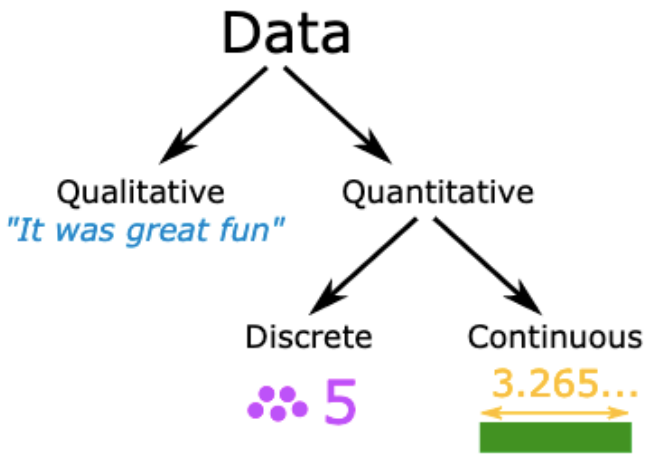

Computer data is information processed or stored by a computer. This information may be in the form of text documents, images, audio clips, software programs, or other types of data. Computer data may be processed by the computer's CPU and is stored in files and folders on the computer's secondary storage device.

Data Capturing, Storage, and Retrieval:

Data Capture: It involves the process of gathering data from different sources in digital form.

Data Storage: It is the process of storing the captured data for processing later.

Data Retrieval: It involves fetching data from the storage devices, for its processing as per the user requirement.

Data Deletion and Recovery: Deleting digitally stored data means changing the details of data at bit level, which can be very time- consuming. Therefore, when any data is simply deleted, its address entry is marked as free, and that much space is shown as empty to the user, without actually deleting the data.

In case data gets deleted accidentally or corrupted, there arises a need to recover the data. Recovery of the data is possible only if the contents/memory space marked as deleted have not been overwritten by some other data. Data recovery is a process of retrieving deleted, corrupted and lost data from secondary storage devices.

7.SOFTWARE:

Hardware refers to the physical components of the computer system which can be seen and touched. For example, RAM, keyboard, printer, monitor, CPU etc. On the other hand, software is a set of instructions and data that makes hardware functional to complete the desired task.

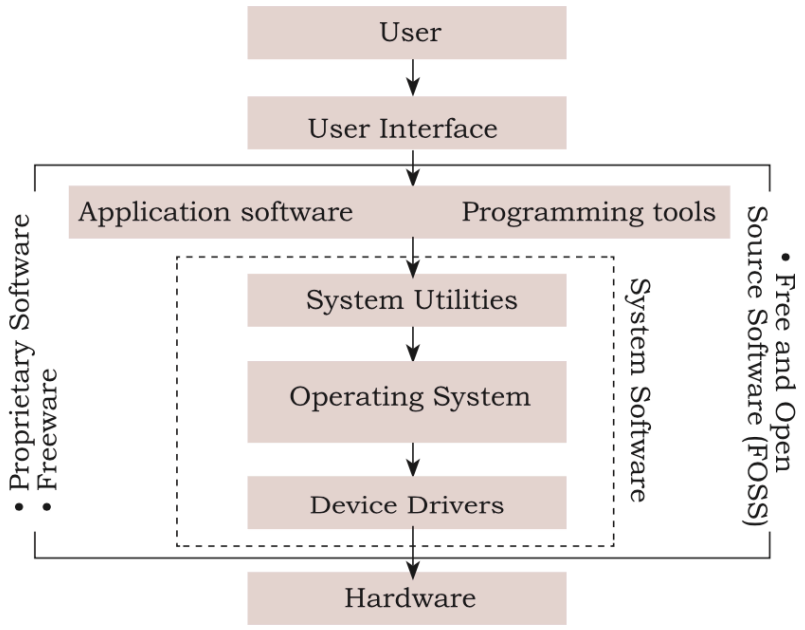

Categorisation Of Software

System Software: **System software** is a type of computer program that is designed to run a computer's hardware and application programs. If we think of the computer **system** as a layered model, the **system software** is the interface between the hardware and user applications. Examples of system software include operating systems, system utilities, device drivers, etc.

Operating System: An **Operating System** (OS) is an interface between a computer user and computer hardware. An **operating system** is a software which performs all the basic tasks like file management, memory management, process management, handling input and output, and controlling peripheral devices such as disk drives and printers.

System Utilities: Software used for maintenance and configuration of the computer system is called system utility.

Device Drivers: The device driver acts as an interface between the device and the operating system. It provides required services by hiding the details of operations performed at the hardware level of the device. Just like a language translator, a device driver acts as a mediator between the operating system and the attached device.

Application software: (app for short) is computing **software** designed to carry out a specific task other than one relating to the operation of the computer itself, typically to be used by end-users. Examples of an **application** include a word processor and a media player. There are again two broad categories of application software: general purpose and customised application software.

General Purpose Software : The application software developed for generic applications, to cater to a bigger audience in general are called general purpose software. For example: Ms-Office, VLC etc

Customised Software: These are custom or tailor-made application software, that are developed to meet the requirements of a specific organisation or an individual.

Proprietary Software: When software to be used has to be purchased from the vendor who has the copyright of the software, then it is a proprietary software. Examples: MS-Windows.

Freeware: Sometimes, software are freely available for use but source code may not be available. Such software is called freeware. Examples of freeware are Skype, Adobe Reader etc.

Free and Open Source Software (FOSS): Developers of some software allow public to freely use their software along with source code with an aim to improve further with each other’s help. Such software is known as Free and Open Source Software (FOSS). Example: Mozilla Firefox, Ubuntu(Linux).